EUROPEAN STANDARD

NORME EUROPÉENNE

EUROPÄISCHE NORM

FINAL DRAFT
FprEN 14782

August 2017

ICS 77.140.50; 77.150.01; 91.060.10; 91.060.20

Will supersede EN 14782:2006

English Version

Self-supporting metal sheet for roofing, external cladding and internal lining - Product specification and requirements

Plaques métalliques autoportantes pour couverture, toitures, bardages extérieur et intérieur et cloisons - Spécification de produit et exigences

Selbsttragende Dachdeckungs- und Wandbekleidungselemente für die Innen- und Außenanwendung aus Metallblech - Produktspezifikation und Anforderungen

This draft European Standard is submitted to CEN members for formal vote. It has been drawn up by the Technical Committee CEN/TC 128.

If this draft becomes a European Standard, CEN members are bound to comply with the CEN/CENELEC Internal Regulations which stipulate the conditions for giving this European Standard the status of a national standard without any alteration.

This draft European Standard was established by CEN in three official versions (English, French, German). A version in any other language made by translation under the responsibility of a CEN member into its own language and notified to the CEN-CENELEC Management Centre has the same status as the official versions.

CEN members are the national standards bodies of Austria, Belgium, Bulgaria, Croatia, Cyprus, Czech Republic, Denmark, Estonia, Finland, Former Yugoslav Republic of Macedonia, France, Germany, Greece, Hungary, Iceland, Ireland, Italy, Latvia, Lithuania, Luxembourg, Malta, Netherlands, Norway, Poland, Portugal, Romania, Serbia, Slovakia, Slovenia, Spain, Sweden, Switzerland, Turkey and United Kingdom.

Recipients of this draft are invited to submit, with their comments, notification of any relevant patent rights of which they are aware and to provide supporting documentation.

Warning : This document is not a European Standard. It is distributed for review and comments. It is subject to change without notice and shall not be referred to as a European Standard.

FprEN 14782 - Preview only Copy via ILNAS e-Shop

EUROPEAN COMMITTEE FOR STANDARDIZATION
COMITÉ EUROPÉEN DE NORMALISATION
EUROPÄISCHES KOMITEE FÜR NORMUNG

CEN-CENELEC Management Centre: Avenue Marnix 17, B-1000 Brussels

© 2017 CEN All rights of exploitation in any form and by any means reserved worldwide for CEN national Members.

Ref. No. FprEN 14782:2017 E

Contents

Page

European foreword 4
1 Scope 5
2 Normative references 5
3 Terms and definitions 6
4 Requirements 7
4.1 Materials 7
4.2 Nominal thickness 7
4.3 Mechanical resistance 7
4.3.1 General 7
4.3.2 Resistance of roofing products to concentrated forces 8
4.4 Water permeability 8
4.5 Vapour and air permeability 8
4.6 Dimensional change 8
4.7 Dimensional tolerances 9
4.8 Durability 9
4.9 External fire performance 9
4.10 Reaction to fire 9
4.11 Release of regulated dangerous substances 9
5 Testing, assessment and sampling methods 9
5.1 External fire performance for roof covering products 9
5.1.1 Products deemed to satisfy the requirements for external fire performance 9
5.1.2 Products classified without the need for further testing (CWFT option) 10
5.1.3 Other products 10
5.2 Reaction to fire 10
5.2.1 Products satisfying the requirements for reaction to fire Class A1 without the need for testing 10
5.2.2 Products classified without the need for further testing (CWFT option) 10
5.2.3 Other products 10
6 Assessment and verification of constancy of performance - AVCP 10
6.1 General 10
6.2 Type testing 11
6.2.1 General 11
6.2.2 Sampling for product type determination 13
6.3 Factory production control (FPC) 13
6.3.1 General 13
6.3.2 Requirements 15
7 Designation 17
8 Product marking 17
Annex A (normative) Multilayer coated steel sheet 18
A.1 General 18
A.2 Substrate material 18
A.3 Specific requirements 18
A.3.1 Minimum nominal values of thickness 18

FprEN 14782 - Preview only Copy via ILNAS e-Shop

A.3.2 Bituminous coating specification 18
A.3.3 Durability 19
A.4 Freedom from defects 19

Annex B (normative) Determination of resistance to concentrated forces 20
B.1 Principle 20
B.2 Test spans 20
B.3 Test sheets 21
B.4 Test procedure 21
B.5 Number of tests and analysis of results 22
B.6 Acceptance criteria 23
B.7 Test report 24

Annex C (normative) Mounting and fixing conditions of the test specimen for reaction to fire testing 25
C.1 General 25
C.2 Mounting and fixing conditions 25
C.2.1 General 25
C.2.2 General configuration 25
C.2.3 Securing the overlap vertical joint 27
C.2.4 Standard assembly – Steel corner flashings 27
C.2.5 Alternative assembly – Corner flashings and seals 27
C.2.6 Test arrangement for reaction to fire test according to EN ISO 11925-2 (Ignitability test) 27
C.3 Direct and extended application of the fire test results according to EN 13823 28
C.3.1 General 28
C.3.2 Direct application: Systems with only one metal sheet (single skin system without insulation) 28
C.3.3 Direct application: Systems with two (profiled or flat) coated metal sheets (or one cassette plus one sheet) with an insulation between the two sheets (double skin system) 30
C.3.4 Extended application: Other insulated systems – General methodology 33

Annex ZA (informative) Relationship of this European Standard with Regulation (EU) No.305/2011 35

Bibliography 40

FprEN 14782 - Preview only Copy via ILNAS e-Shop

European foreword

This document (FprEN 14782:2017) has been prepared by Technical Committee CEN/TC 128 "Roof covering products for discontinuous laying and products for wall cladding", the secretariat of which is held by NBN.

This document is currently submitted to the Formal Vote.

This document will supersede EN 14782:2006.

This document has been prepared under a mandate given to CEN by the European Commission and the European Free Trade Association, and supports essential requirements of EU Directive(s).

For relationship with EU Directive(s), see informative Annex ZA, which is an integral part of this document.

FprEN 14782 - Preview only Copy via ILNAS e-Shop

1 Scope

This European Standard specifies the terminology, requirements and test methods for factory made self-supporting metal sheets and tiles (for non-structural applications) delivered in the form of manufactured pieces for roofing and wall cladding and lining.

This standard also covers curved sheets, sheets intended to be used with insulation and membranes, ceiling products (including internal metal sheet) and soffit products and cassettes (see Figure 1).

This standard covers self-supporting copper, zinc, steel, aluminium and stainless steel sheet with or without coatings, e.g. metallic, organic, inorganic or multi-layer (see Annex A). A moisture retaining layer intended to reduce the fall of droplets coming from condensation may be present on the reverse side of the product.

This standard does not cover products for structural purposes, i.e. it does cover products used in constructions of Class III (according to EN 1993-1-3), it does not cover products used in constructions of Classes I and II (according to EN 1993-1-3] intended to contribute to the global or partial stability of the building structure by providing racking resistance.

Requirements concerning acoustical and thermal insulation properties are not considered in this draft standard.

This standard does not include calculation or design requirements with regards to the works, installation techniques or the performance of the installed products.

FprEN 14782 - Preview only Copy via ILNAS e-Shop

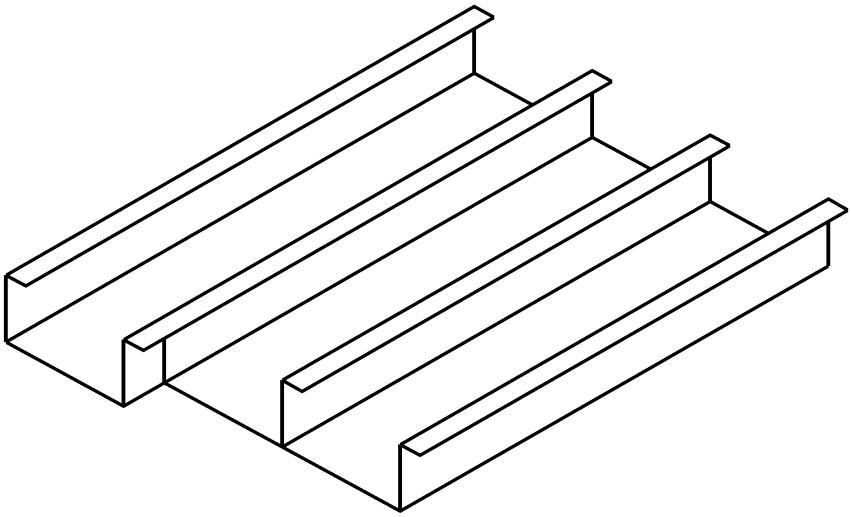

Figure 1 — Illustration of a cassette

2 Normative references

The following documents, in whole or in part, are normatively referenced in this document and are indispensable for its application. For dated references, only the edition cited applies. For undated references, the latest edition of the referenced document (including any amendments) applies.

EN 506:2008, *Roofing products from metal sheet - Specification for self-supporting products of copper or zinc sheet*

EN 508-1:2014, *Roofing and cladding products from metal sheet - Specification for self-supporting of steel, aluminium or stainless steel sheet - Part 1: Steel*

EN 508-2:2008, *Roofing products from metal sheet - Specification for self-supporting products of steel, aluminium or stainless steel sheet - Part 2: Aluminium*

EN 508-3:2008, *Roofing products from metal sheet - Specification for self-supporting products of steel, aluminium or stainless steel sheet - Part 3: Stainless steel*

CEN/TS 1187:2012, *Test methods for external fire exposure to roofs*

EN 1427:2015, *Bitumen and bituminous binders - Determination of the softening point - Ring and Ball method*

EN 10088-1:2014, *Stainless steels - Part 1: List of stainless steels*

EN 10204:2004, *Metallic products - Types of inspection documents*

EN 10346:2015, *Continuously hot-dip coated steel flat products for cold forming - Technical delivery conditions*

EN 13162:2012+A1:2015, *Thermal insulation products for buildings - Factory made mineral wool (MW) products – Specification*

EN 13501-1:2007+A1:2009, *Fire classification of construction products and building elements - Part 1: Classification using data from reaction to fire tests*

EN 13501-5:2016, *Fire classification of construction products and building elements - Part 5: Classification using data from external fire exposure to roofs tests*

EN 13823:2010+A1:2014, *Reaction to fire tests for building products - Building products excluding floorings exposed to the thermal attack by a single burning item*

EN ISO 6270-1:2001, *Paints and varnishes - Determination of resistance to humidity - Part 1: Continuous condensation (ISO 6270-1:1998)*

EN ISO 6892-1:2016, *Metallic materials - Tensile testing - Part 1: Method of test at room temperature (ISO 6892-1:2016)*

EN ISO 6988:1994, *Metallic and other non-organic coatings - Sulfur dioxide test with general condensation of moisture (ISO 6988:1985)*

EN ISO 9001:2015, *Quality management systems - Requirements (ISO 9001:2015)*

EN ISO 9227:2017, *Corrosion tests in artificial atmospheres - Salt spray tests (ISO 9227:2017)*

EN ISO 11925-2:2010, *Reaction to fire tests - Ignitability of products subjected to direct impingement of flame - Part 2: Single-flame source test (ISO 11925-2:2010)*

3 Terms and definitions

For the purposes of this document, the terms and definitions given in EN 506:2008, EN 508-1:2014, EN 508-2:2008 and EN 508-3:2008 and the following apply.

3.1
base material
coated or non-coated flat sheet or strip (coil) of metal that may be perforated or not,used for the production of a finished product according to this draft standard

FprEN 14782 - Preview only Copy via ILNAS e-Shop